CHESS

CENTER FOR HYBRID & EMBEDDED SOFTWARE SYSTEMS

COLLEGE OF ENGINEERING, UC BERKELEY

Cellular Neural Network Based Central Pattern Generators for Bipedal Walkers

http://raptor.calrobotics.com

http://chess.eecs.berkeley.edu

Research Group

Faculty Advisors

Dr. Leon O. Chua, UC Berkeley EECS
Dr. Shankar S. Sastry, UC Berkeley EECS

Graduate Students

Bharathwaj Muthuswamy, UC Berkeley EECS
Dr. Ishtvan Szatmari, Hungarian Academy of Sciences

Berkeley Undergraduate Students

Spencer Ahrens, Mech. E, sahrens@berkeley.edu
Christian Ueland, Mech. E, cueland@berkeley.edu
Kris Matthews, Mech. E, kristdm@berkeley.edu
Jonathan Tay, Mech. E, Jon_Tay@berkeley.edu
Sanjay Nagarkar, Mech. E, sanjaynagarkar@hotmail

Goal(s) of the Project

1. To develop a simulation environment for the study of the dynamics involved in bipedal walking.
2. To design and implement an analog circuit capable of producing the patterns for dynamic walking on a level surface.

We are following this approach because of the simplicity of the design and modeling.

What is a Cellular Neural Network?

A Cellular Neural Network (CNN) can be qualitatively defined as an array of identical, locally interconnected nonlinear dynamic circuits. Mathematically, a CNN is described by ([1], p. 12):

$$C\frac{dx_{ij}}{dt} = -\frac{x_{ij}}{R_x} + \sum_{C(k,l)\in N_r(i,j)} (A(i,j;k,l)y_{kl} + B(i,j;k,l)u_{kl})$$

In the equation above, A and B are known as the feedback and input cloning templates respectively. x_{ij} is the state of the ijth cell and N is the r-neighbourhood. y and u are the outputs and inputs of a cell respectively. The nonlinearity arises because of y:

$$y_{ij} = \frac{(|x_{ij}+1| - |x_{ij}-1|)}{2}$$

What is a Central Pattern Generator?

Walking animals employ several distinct periodic patterns of leg movements, called gaits. The Central Pattern Generator (CPG) is a network of neurons producing this periodic pattern for locomotion ([1], p. 9).

Reaction-Diffusion CPG

$$\dot{x}_1(t) = -x_1 + \alpha \cdot y_1 - \beta \cdot y_2$$
$$\dot{x}_2(t) = -x_2 + \alpha \cdot y_2 + \beta \cdot y_1$$

The reaction diffusion equation shown above is a very good model for bipedal locomotion since the reactive part of the equation corresponds to the dynamics and the diffusive part corresponds to the interaction between different neurons. It can also be easily implemented using op-amps

MATLAB Simulation (by Ishtvan)

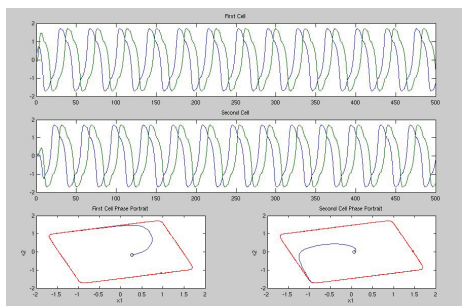

System Block Diagram

Circuit Implementation (by Bharath)

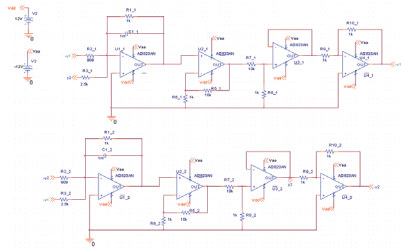

SolidWorks Modeling (by Spence et. al.)

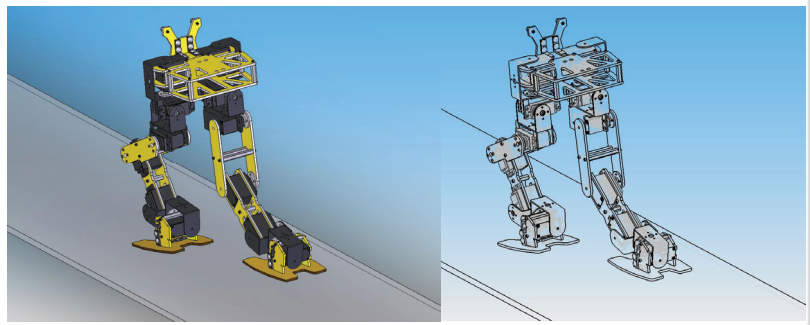

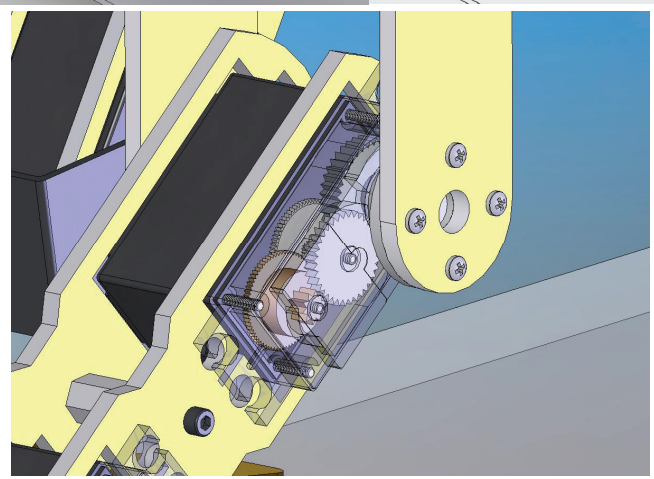

SolidWorks (http://www.solidworks.com) model of our bipedal walker. The top figures show the robot in standard view, the figure on the right is the wireframe model showing the detailed servo design. The bottom figure shows a transparency view of the servo for the left knee. The detailed modeling of the gears helps us analyze the stress level on the parts.

References

1. *Bio-Inspired Emergent Control of Locomotion Systems.* Frasca, Matti., Arena, Paolo., Luigi, Fortuna. World Scientific Series on Nonlinear Science. Series A. Vol. 48. Series Editor: Leon O. Chua.

February 10th 2005