Semantic Foundation of the Tagged Signal Model

Xiaojun Liu
Sun Microsystems, Inc.

Chess Seminar
February 21, 2006

Outline

- Motivation
  - Heterogeneous embedded systems
  - The tagged signal model as a semantic metamodel
- Tagged process networks
- Timed process networks
- Discrete event process networks
- The metric structure of signals
- Conclusion

Embedded Systems: "Invisible Computing Systems"

GENERAL MOTORS YEAR 2000 STATEMENT, July 22, 1999

GM vehicles have long been equipped with microprocessors which today, depending on the vehicle, are used for

- powertrain management
- anti-lock braking systems
- traction control
- stability enhancement
- supplemental inflatable restraint systems
- real-time damping
- navigation systems
- automatic climate control
- remote keyless entry
- head-up display
- entertainment systems
- entry control
- ...

Safety-Critical Applications of Heterogeneous Embedded Systems

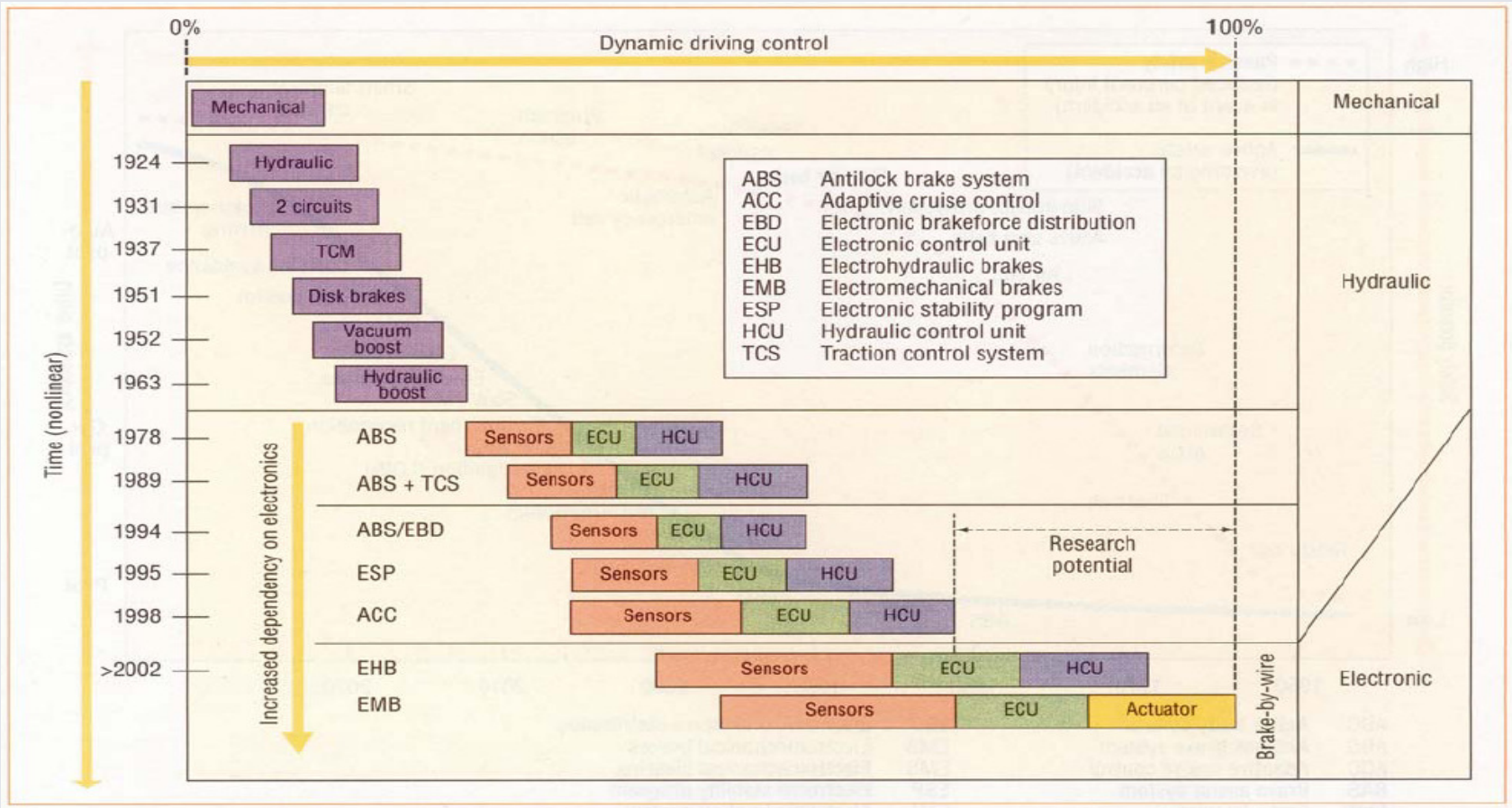

G. Leen and D. Heffernan, "Expanding Automotive Electronic Systems," *IEEE Computer*, January 2002.

Tools and Languages for Designing Heterogeneous Embedded Systems

- Simulink and Stateflow (The MathWorks)
- LabVIEW (National Instruments)
- Modelica (Modelica Association)
- CarSim (Mechanical Simulation Corp.)
- System Studio (Synopsys, Inc.)
- Advanced Design System (Agilent EEsof EDA)
- SystemC (Open SystemC Initiative)
- VHDL and Verilog with Analog and Mixed Signal Extensions
- GME (Vanderbilt University)
- Polis and Metropolis (UC Berkeley)
- Ptolemy and Ptolemy II (UC Berkeley)

The Metamodeling Approach

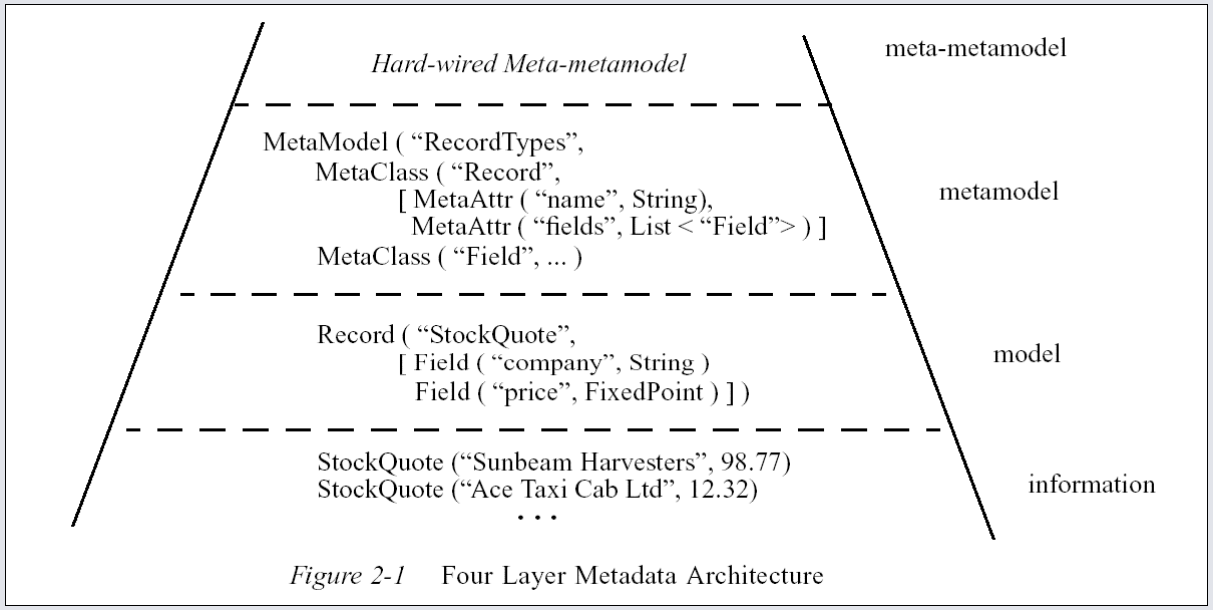

Meta Object Facility (MOF) Specification, Version 1.4, April 2002, OMG.

The Generic Modeling Environment

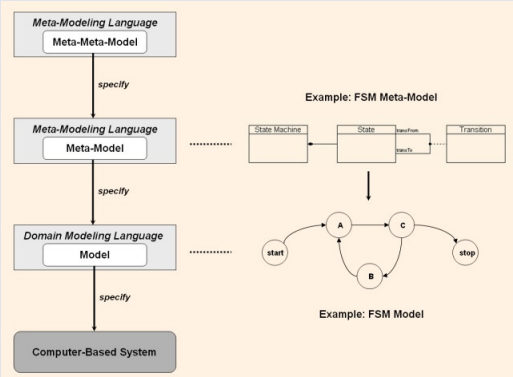

http://www.isis.vanderbilt.edu/Projects/gme/

CDIF (CASE Data Interchange Format)
http://www.eigroup.org/cdif/intro.html

Metropolis Meta Model

http://embedded.eecs.berkeley.edu/metropolis/

The Tagged Signal Model as a Semantic Metamodel

- Proposed as a Framework for Comparing Models of Computation (Lee & ASV, 1997)
- Opportunities Provided:
  - To compare certain properties of various models of computation, such as their notion of synchrony
  - To define formal relations among signals and process behaviors from different models of computation
  - To facilitate the cross-fertilization of results and proof techniques among models of computation

The Goal of This Presentation

Establish a Semantic Foundation of the Tagged Signal Model (TSM)

Explore the Opportunities Provided by the TSM Framework

Approach

- A Three-Step Development Process
  1. Study the properties of a mathematical structure of (sets of) signals
  2. Use this structure to characterize the processes that are functions on signal sets, such as continuity and causality
  3. Determine conditions under which the characterizations are compositional

Outline

- Motivation
  - Heterogeneous embedded systems
  - The tagged signal model as a semantic metamodel
- Tagged process networks
- Timed process networks
- Discrete event process networks
- The metric structure of signals
- Conclusion

Signals

- A signal has a tag set T, which is a partially ordered set.
- A down-set of T is a downward-closed subset of T. $\mathcal{D}(T)$ is the set of down-sets of T.

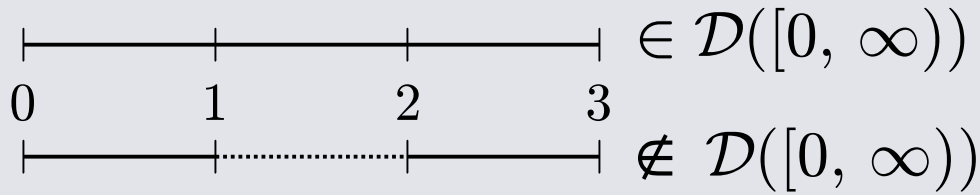

- A signal is a function from a down-set $D \in \mathcal{D}(T)$ to some value set V,

$$signal\colon D \rightarrow V$$

The Prefix Order on Signals

- A signal s_1: $D_1 \rightarrow V$ is a prefix of s_2: $D_2 \rightarrow V$, denoted $s_1 \preceq s_2$, if and only if

$$D_1 \subseteq D_2, \text{ and } s_1(t) = s_2(t), \forall t \in D_1$$

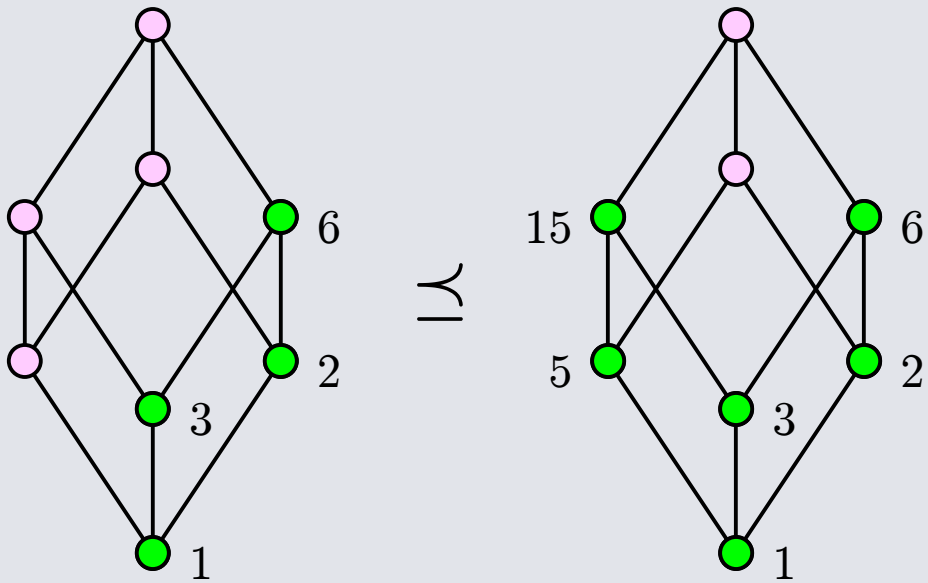

The Order Structure of Signals

- For any poset T of tags and set V of values, let $\mathcal{S}(T, V)$ be the set of all signals from down-sets of T to V.
- With the prefix order $\preceq$, $\mathcal{S}(T, V)$ is
  - a poset
  - a complete partial order (CPO)
  - a complete lower semilattice (i.e. any subset of signals have a "longest" common prefix)

Processes

- Processes are relations or functions among signal sets

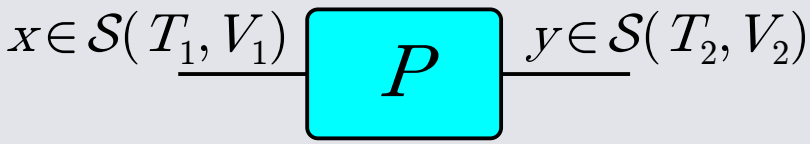

$P \subseteq \mathcal{S}(T_1, V_1) \times \mathcal{S}(T_2, V_2)$

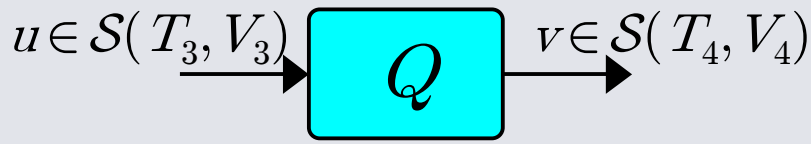

$Q\colon \mathcal{S}(T_3, V_3) \to \mathcal{S}(T_4, V_4)$

- As functions among posets/CPOs, processes may be
  - Monotonic, $r \preceq s \Rightarrow P(r) \preceq P(s)$
  - (Scott) Continuous, $P(\vee D) = \vee P(D)$
  - Maximal

Tagged Process Networks

- A direct generalization of Kahn process networks

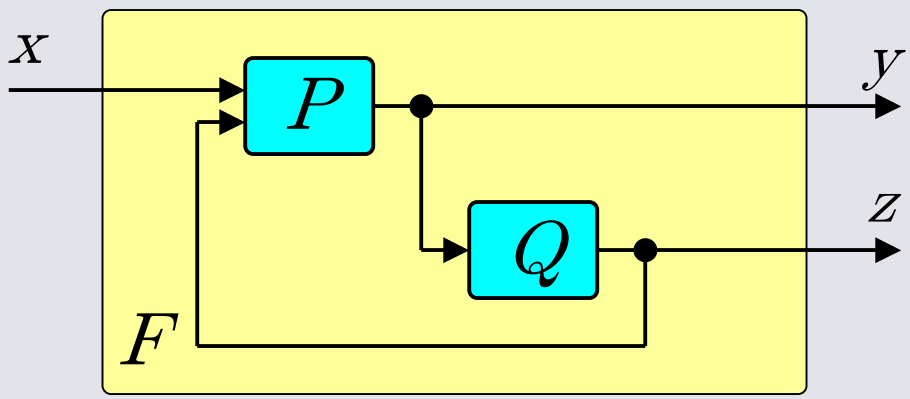

$(y, z) = F(x)$

where (y, z) is the least solution of the equations

$$y = P(x, z)$$
$$z = Q(y)$$

- If the processes P and Q are Scott-continuous, then F is Scott-continuous.

Scott-continuity is compositional.

Outline

- Motivation
  - Heterogeneous embedded systems
  - The tagged signal model as a semantic metamodel
- Tagged process networks
- Timed process networks
- Discrete event process networks
- The metric structure of signals
- Conclusion

Timed Process Networks

- Each signal in a tagged process network may have its own tag set.
- In a timed process network, all signals share the same totally ordered tag set.

Timed Signals

- Let $T = [0, \infty)$, and $V_\varepsilon = V \cup \{\varepsilon\}$, where ε represents the absence of value. $\mathcal{S}(T, V_\varepsilon)$ is the set of timed signals.

$s(t) = 1$

$s(1\text{-}1/k) = 1,\ k = 1, 2, \ldots$

$s(k) = 1,\ k = 0, 1, 2, \ldots$

Timed Processes

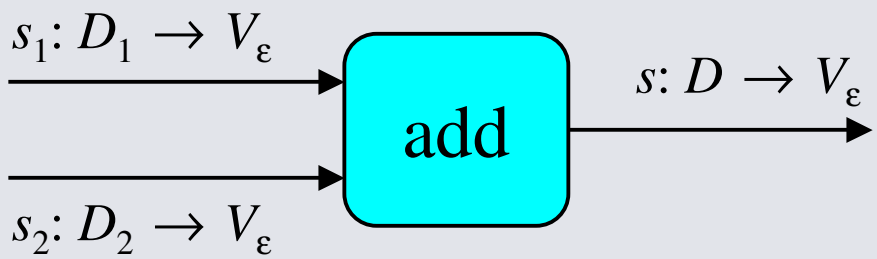

$D = D_1 \cap D_2$

$s(t) = s_1(t) +_\varepsilon s_2(t)$

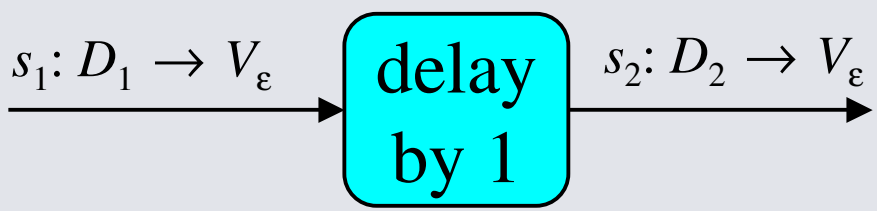

$D_2 = D_1 \oplus \{1\} \cup [0, 1)$

$s_2(t) = s_1(t-1)$, when $t \geq 1$

ε, when $t \in [0, 1)$

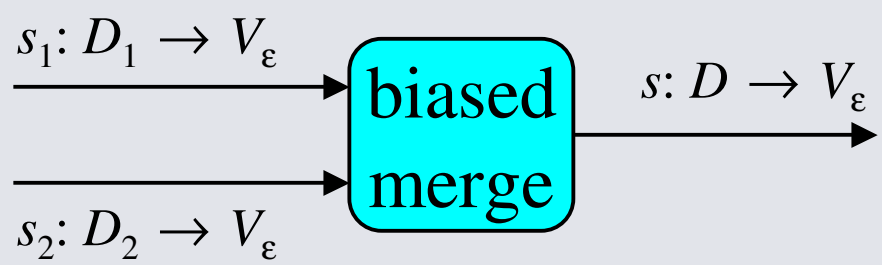

$D = D_1 \cap D_2$

$s(t) = s_1(t)$, when $s_1(t) \in V$

$s_2(t)$, otherwise

A Timed Process Network Example

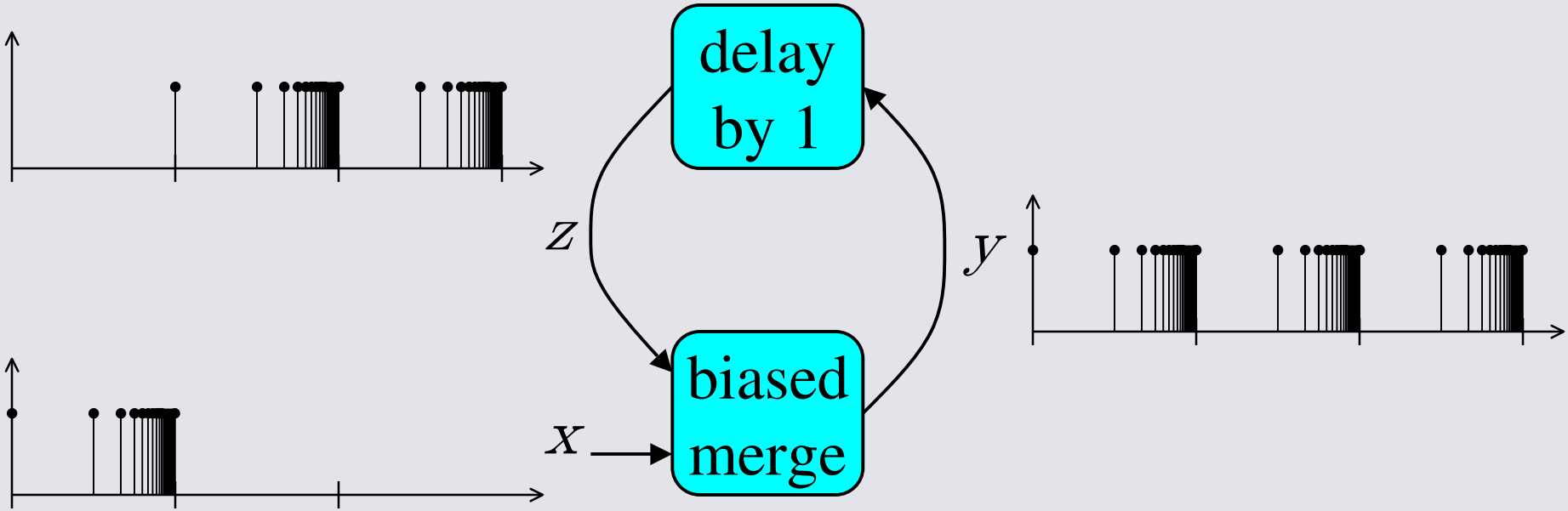

A Non-Causal Process in the Network

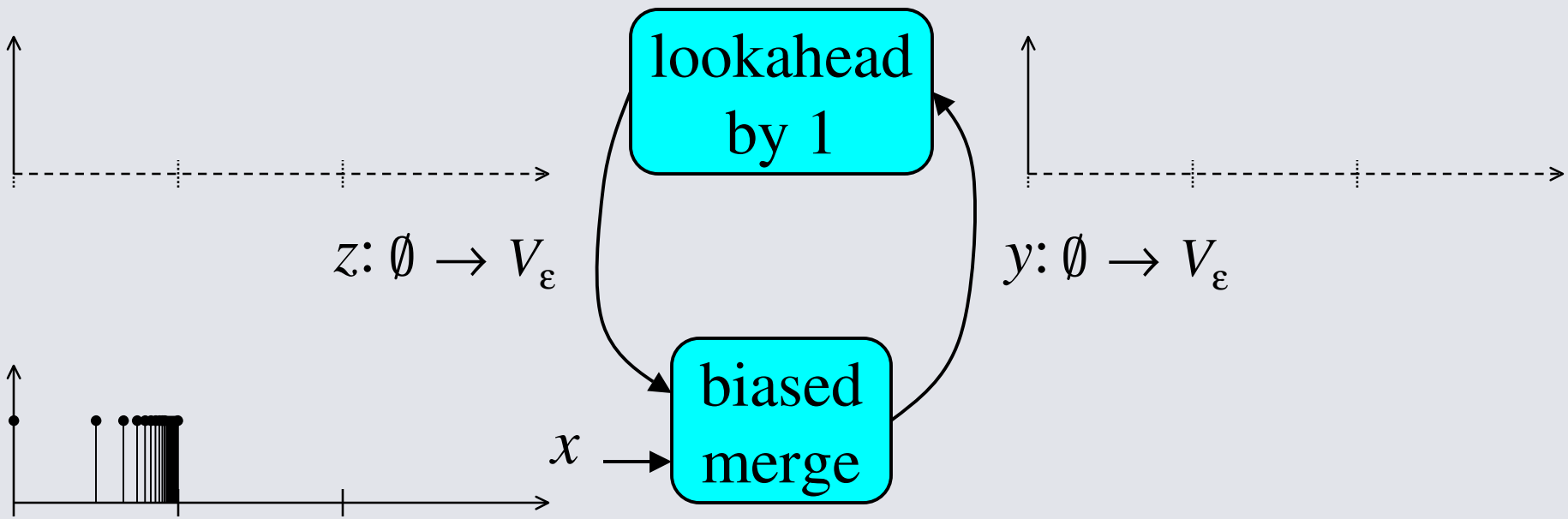

Causality

- A timed process P is causal if
  - it is monotonic, and
  - for all $s: D_1 \to V_1$, $P(s): D_2 \to V_2$,

$$D_1 \subseteq D_2$$

- A timed process P is strictly causal if
  - it is monotonic, and
  - for all $s: D_1 \to V_1$, $P(s): D_2 \to V_2$,

$$D_1 \subset D_2, \text{ or } D_2 = T$$

Causality and Continuity

- Neither implies the other.
- A process may be continuous but not causal, e.g. “lookahead by 1”.
- A process may be causal but not continuous, e.g. one that produces an output event after counting an infinite number of input events.

Causal Timed Process Networks

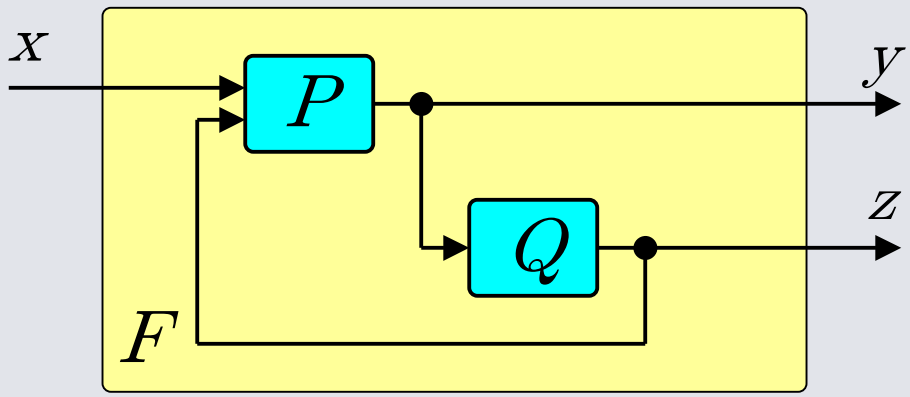

$(y, z) = F(x)$

where (y, z) is the least solution of the equations

$$y = P(x, z)$$
$$z = Q(y)$$

- If processes P and Q are causal and continuous, and at least one of them is strictly causal, then F is causal and continuous.

Causality + continuity is compositional.

Outline

- Motivation
  - Heterogeneous embedded systems
  - The tagged signal model as a semantic metamodel
- Tagged process networks
- Timed process networks
- Discrete event process networks
- The metric structure of signals
- Conclusion

Discrete Event Signals

- A timed signal $s: D \to V_\varepsilon$ is a discrete event signal if for all $t \in D$, s is present at a finite number of times before t.

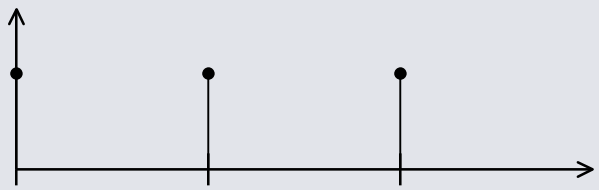

$\mathrm{dom}(s) = [0, \infty)$

$s(k) = 1,\ k = 0, 1, 2, \ldots$

DE, Non-Zeno

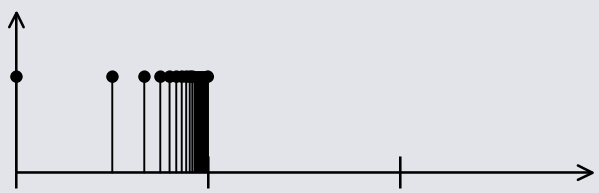

$\mathrm{dom}(s) = [0, \infty)$

$s(1\text{-}1/k) = 1,\ k = 1, 2, \ldots$

Not DE

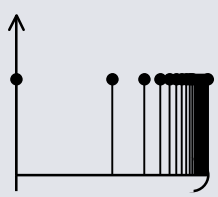

$\mathrm{dom}(s) = [0, 1)$

$s(1\text{-}1/k) = 1,\ k = 1, 2, \ldots$

DE, Zeno

The Order Structure of DE Signals

- For any totally ordered set T of tags and set V of values, the set of all DE signals $\mathcal{S}_{\mathrm{d}}(T, V)$, with the prefix order $\preceq$, is
  - a poset
  - a complete partial order
  - a complete lower semilattice (i.e. any subset of DE signals have a "longest" common prefix)

A DE Process Network Example

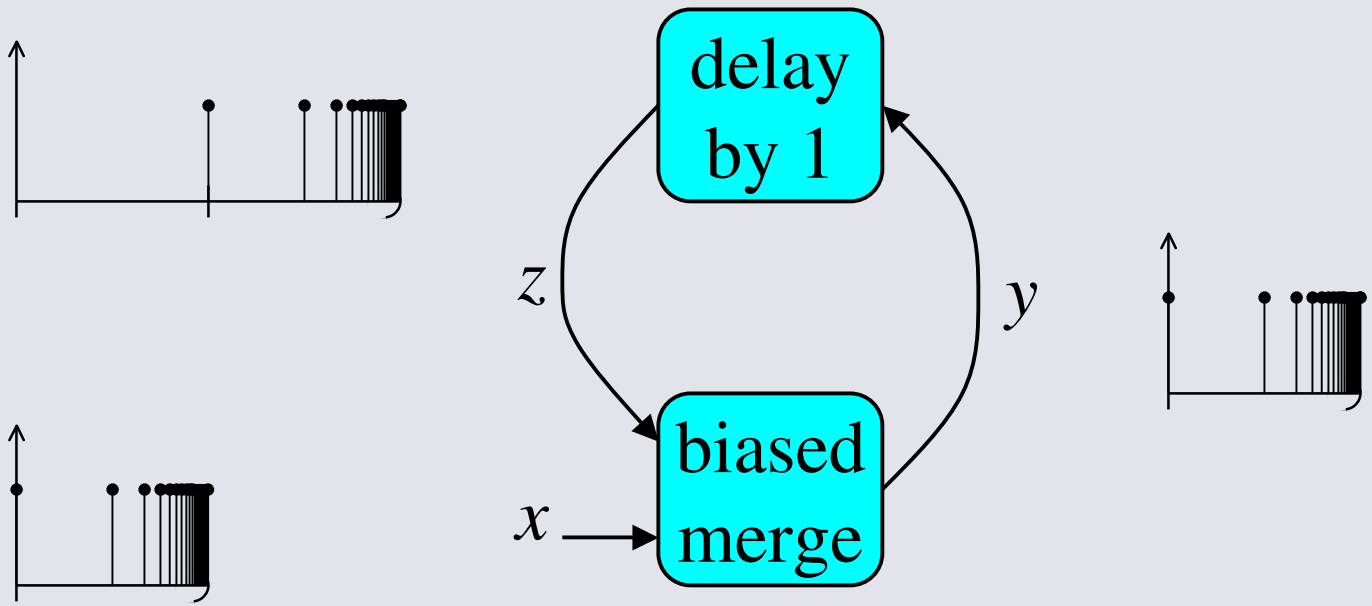

Discrete Event Process Networks

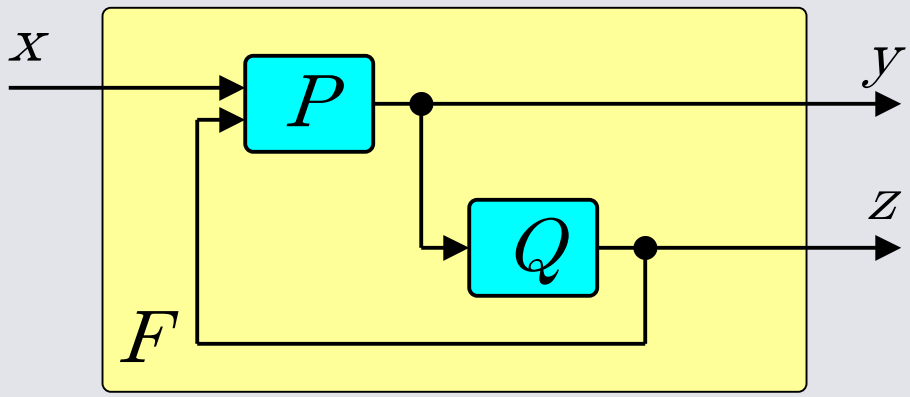

$(y, z) = F(x)$

where (y, z) is the least solution of the equations

$$y = P(x, z)$$
$$z = Q(y)$$

- If DE processes P and Q are Scott-continuous, then F is a DE process and is Scott-continuous.

Discreteness + Scott-continuity is compositional.

Non-Zeno DE Process Networks

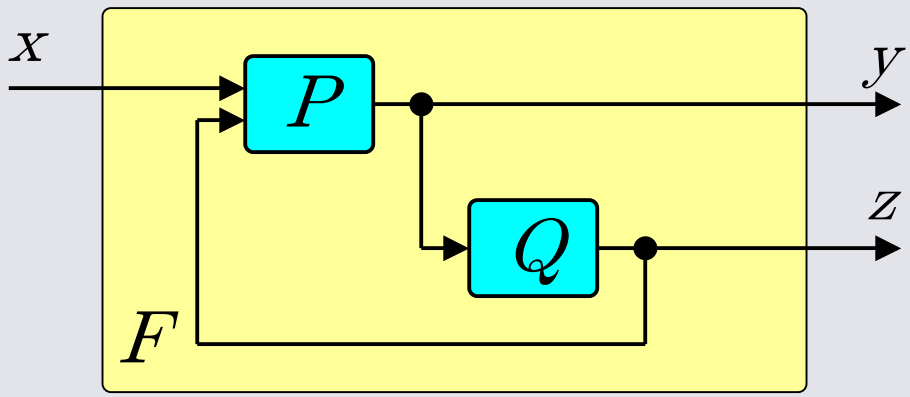

$(y, z) = F(x)$

where (y, z) is the least solution of the equations

$$y = P(x, z)$$
$$z = Q(y)$$

- If DE processes P and Q are causal and Scott-continuous, and at least one of them is strictly causal, then F is a DE process and is causal and Scott-continuous.
- F is non-Zeno in the sense that if x is non-Zeno, $F(x)$ is non-Zeno.

Discreteness + Causality + Scott-continuity is compositional.

A Brief Recap

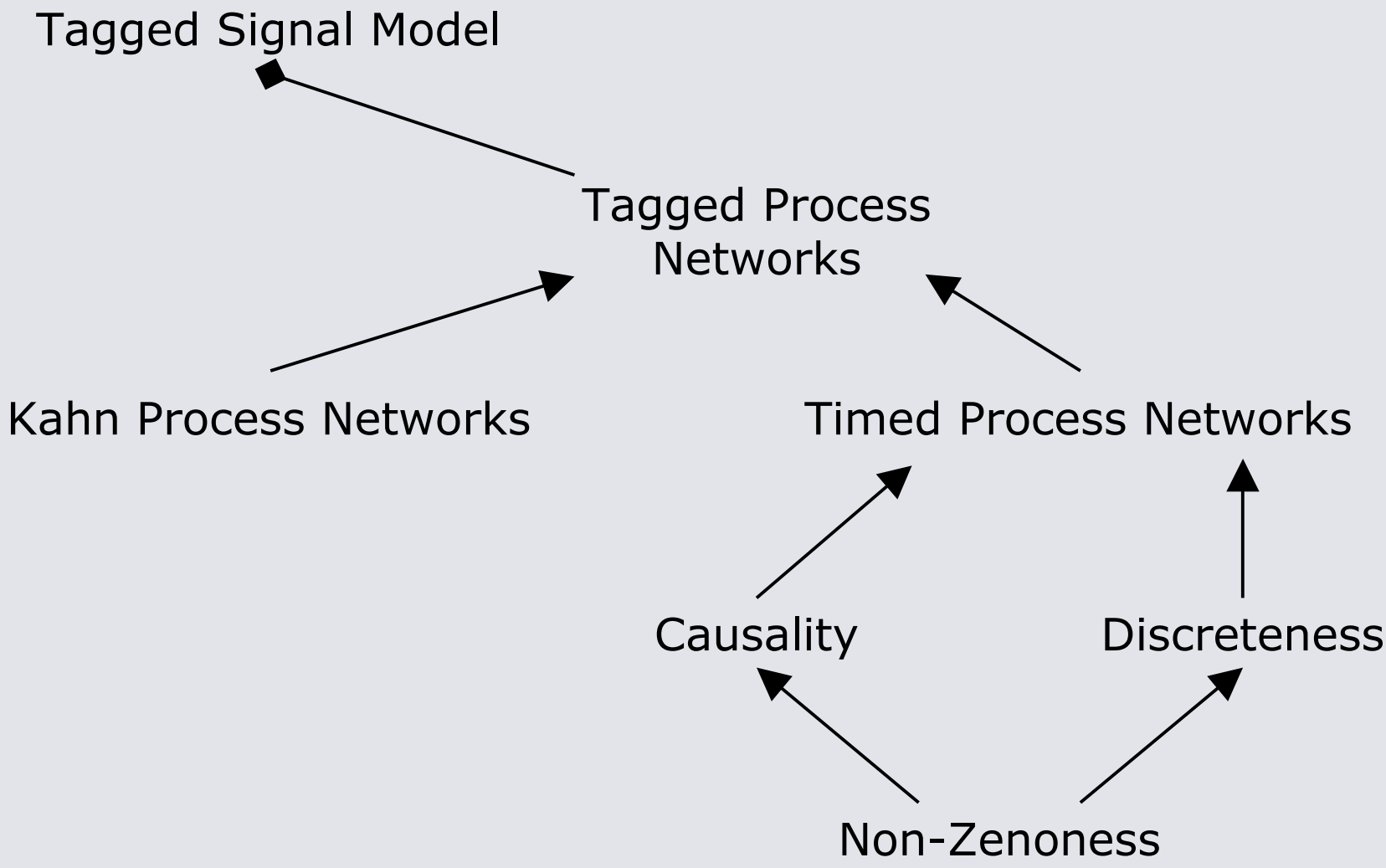

Outline

- Motivation
  - Heterogeneous embedded systems
  - The tagged signal model as a semantic metamodel
- Tagged process networks
- Timed process networks
- Discrete event process networks
- The metric structure of signals
- Conclusion

Generalized Ultrametric

- Let X be a set and Γ be a poset with a minimum element 0. A function

$$d: X \times X \to \Gamma$$

is a generalized ultrametric if for all x, y, $z \in X$ and $\gamma \in \Gamma$,

$$d(x,y) = 0 \Leftrightarrow x = y$$

$$d(x,y) = d(y,x)$$

$$d(x,y) \leq \gamma \text{ and } d(y,z) \leq \gamma \Rightarrow d(x,z) \leq \gamma$$

A Generalized Ultrametric on Tagged Signals

- For any poset T of tags, the set of generalized ultrametric distances, Γ_T, is

$$\Gamma_T = (\mathcal{D}(T), \supseteq)$$

- For any tag set T and value set V,

$$d_{\mathrm{ds}} \colon \mathcal{S}(T,V) \times \mathcal{S}(T,V) \to \Gamma_T,$$

$$d_{\mathrm{ds}}(s_1, s_2) = \begin{cases} \mathrm{dom}(s_1 \wedge s_2) & \text{if } s_1 \neq s_2, \\ T & \text{if } s_1 = s_2. \end{cases}$$

is a generalized ultrametric.

A Metric "Generator"

- If the tag set T is totally ordered, Γ_T is also totally ordered.
- For any totally ordered set Σ with a minimum element σ_0, and a function

$$g: \Gamma_T \to \Sigma$$

such that

  - g is monotonic
  - $g(\gamma) = \sigma_0 \Leftrightarrow \gamma = 0$

$g \circ d_{\mathrm{ds}}$ is a (generalized) ultrametric on $\mathcal{S}(T, V)$.

Summary

- The Order Structure of Tagged Signals and Tagged Process Networks
- Causality, Discreteness, and Non-Zenoness in Timed Process Networks
- A Generalized Ultrametric on Tagged Signals
- A Formulation of Processes as Labeled Transition Systems for Comparing Implementations or Simulations of Tagged Processes

The End

Questions?