Tunneling Ball Device: Drop Basin

Top

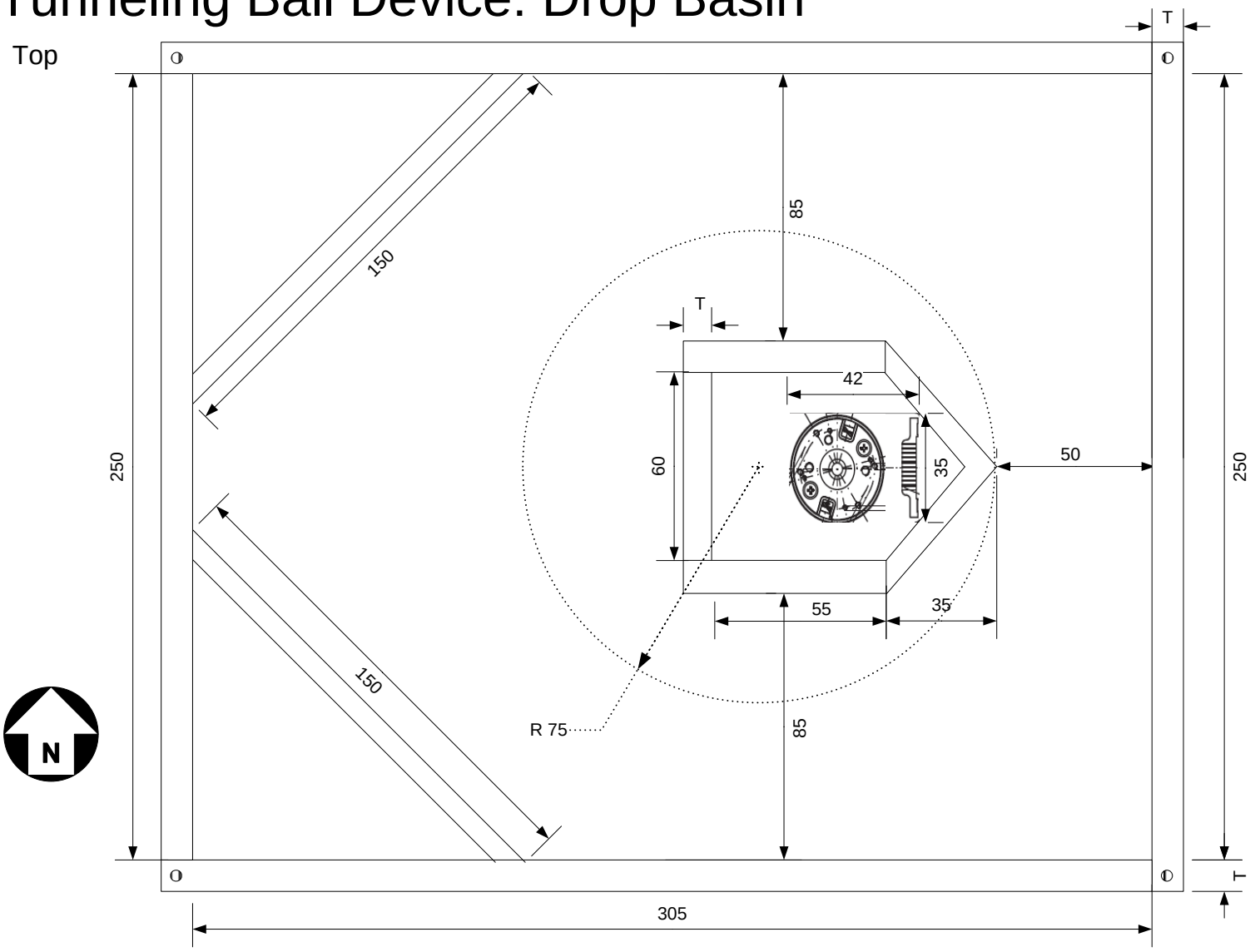

Side (middle slice)

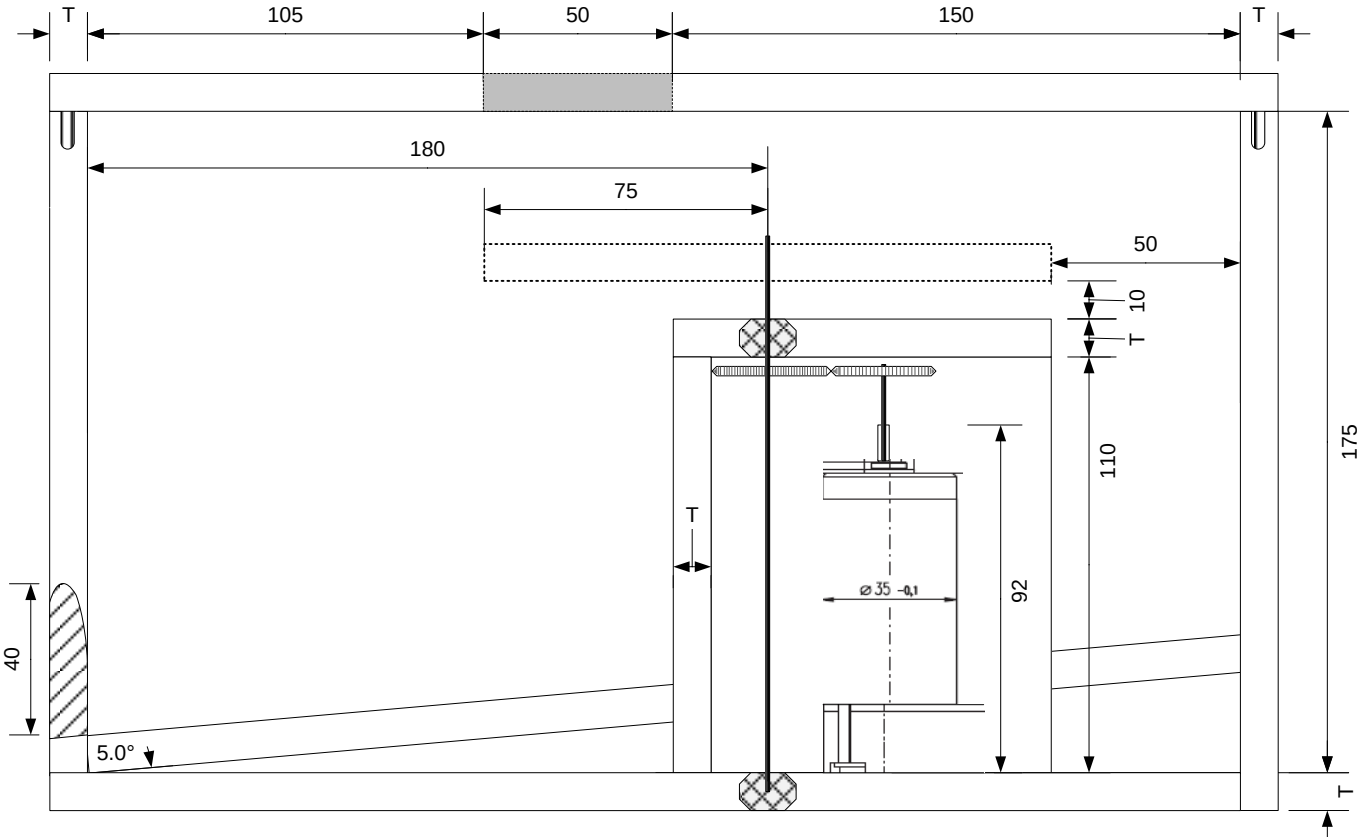

Author: Jeff C. Jensen. University of California, Berkeley, department of Electrical Engineering & Computer Science, 2010

Tunneling Ball Device: Floorboard

Top

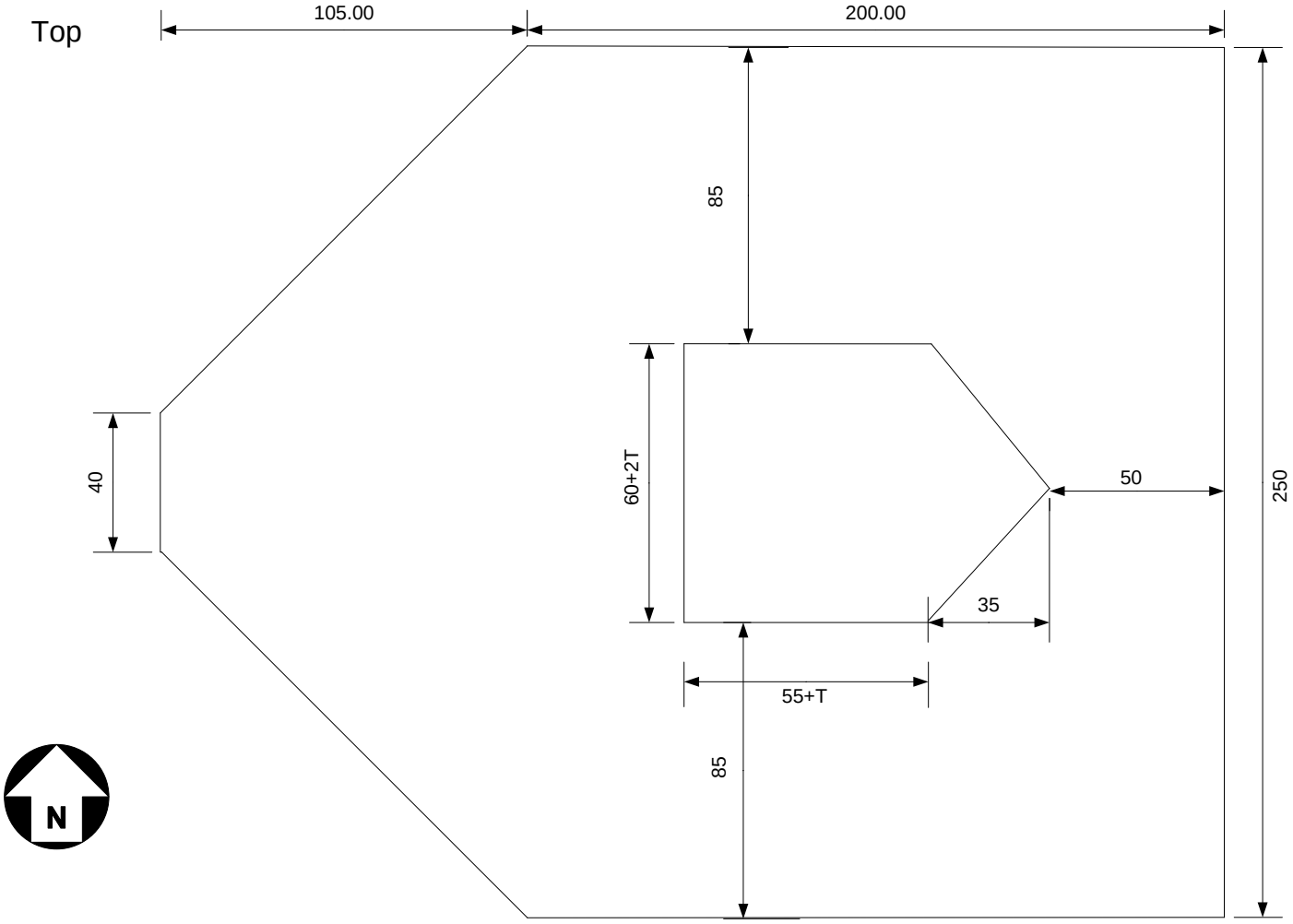

Side (middle slice)

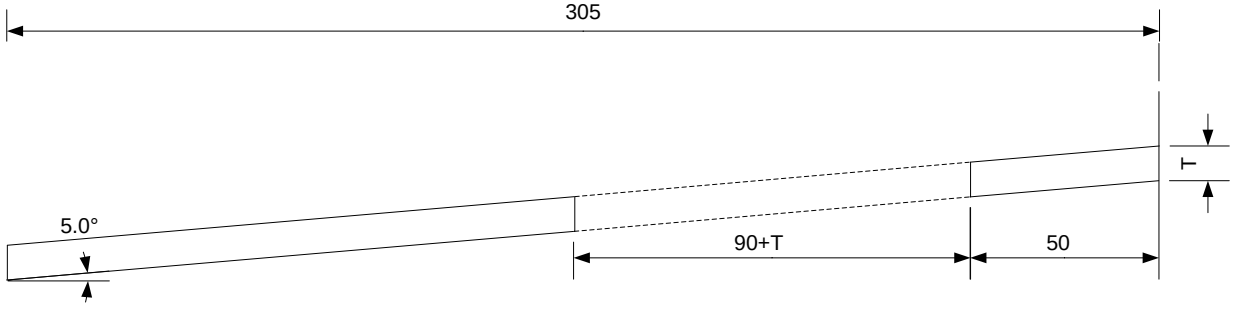

Author: Jeff C. Jensen. University of California, Berkeley, department of Electrical Engineering & Computer Science, 2010

Tunneling Ball Device: Topboard

Top

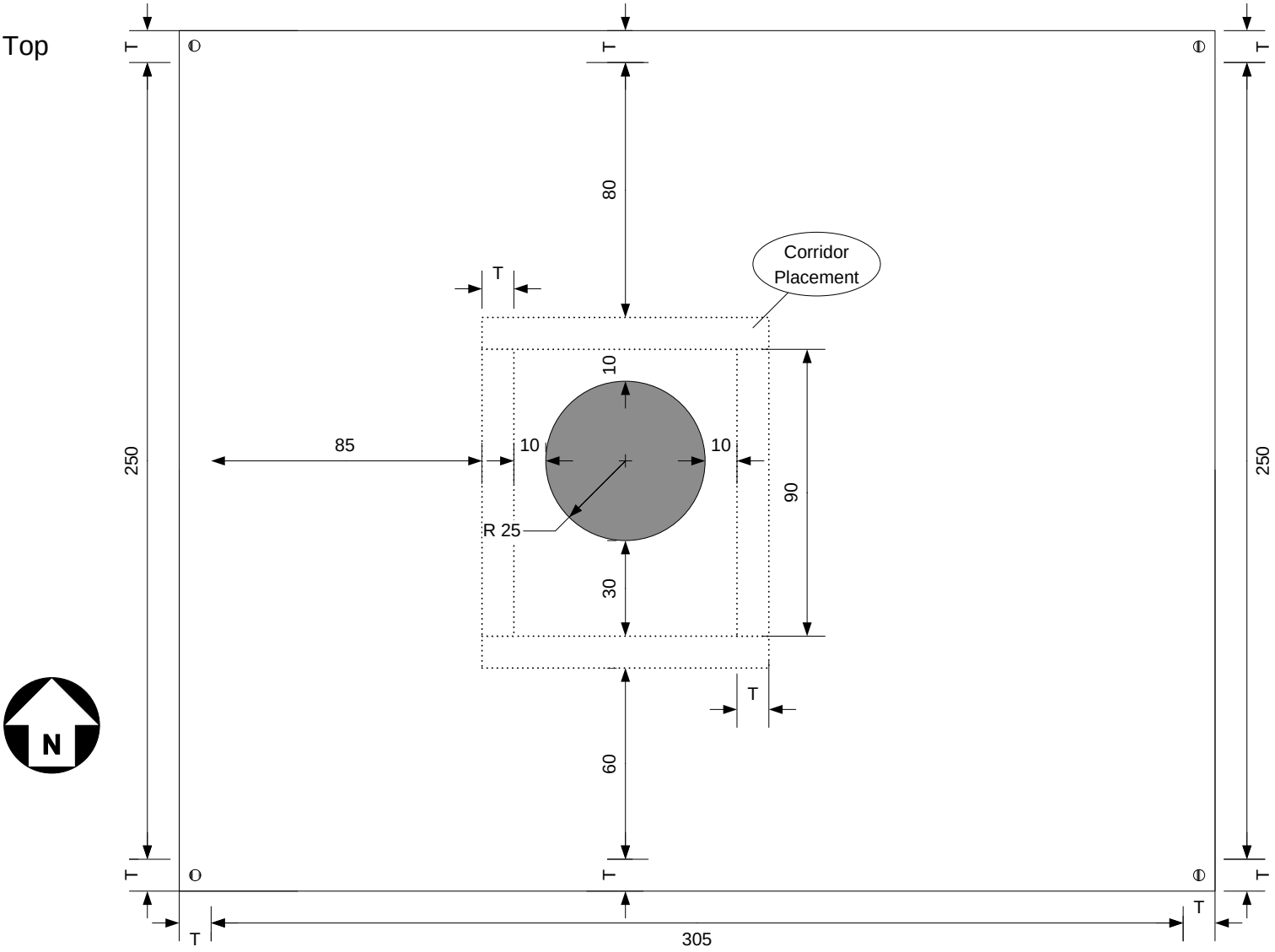

Side (middle slice)

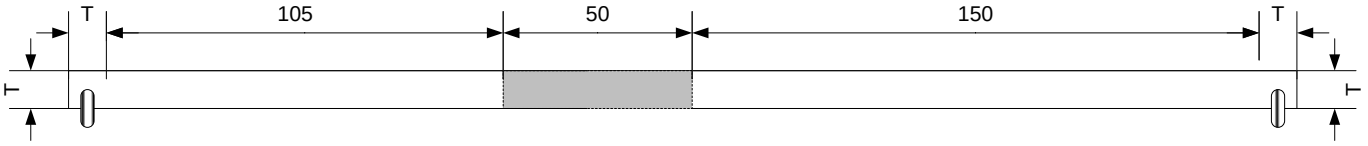

Author: Jeff C. Jensen. University of California, Berkeley, department of Electrical Engineering & Computer Science, 2010

Tunneling Ball Device: Sensor Housing

Corridor Top

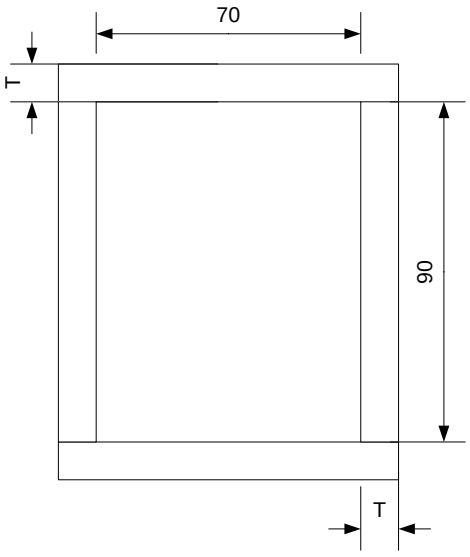

Sensor Mount Top

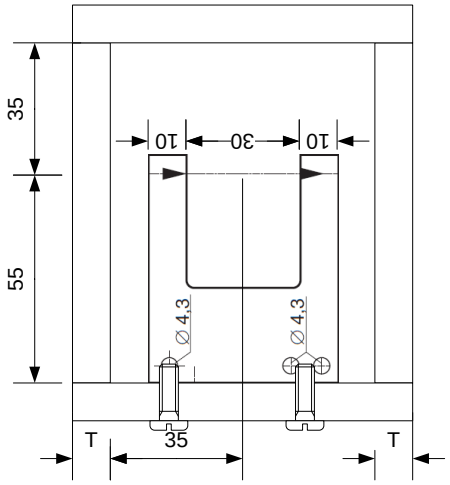

Corridor Side

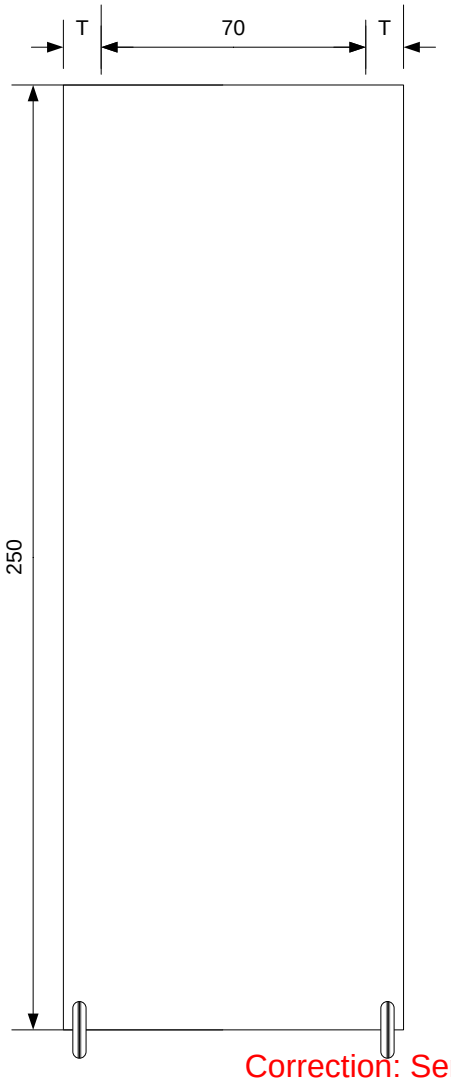

Sensor Mount Side

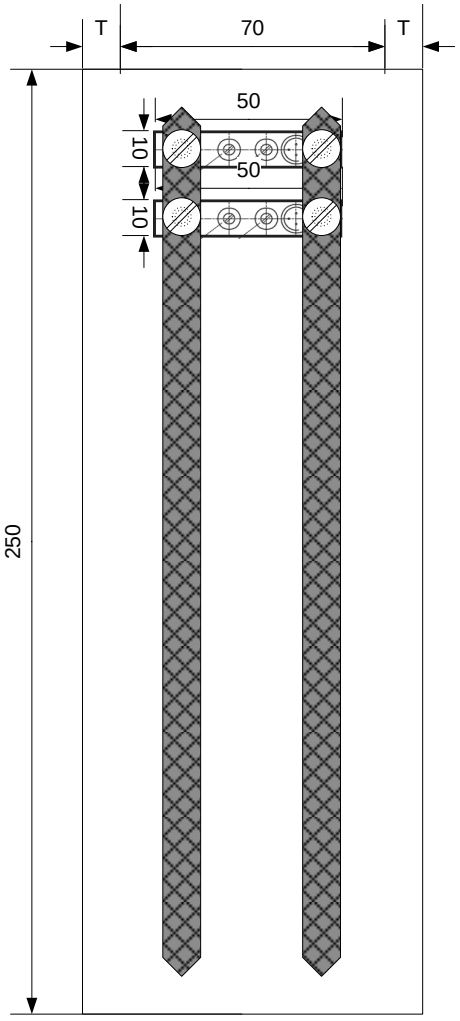

Sensor Mount Side
(rotated 90 degree CW)

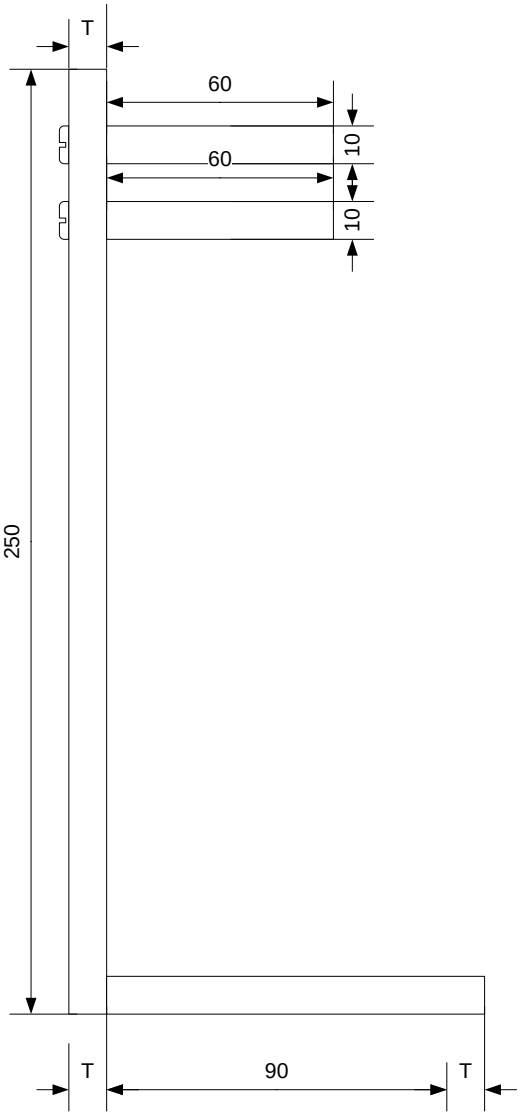

Correction: Sensor mount and corridor should be one piece.

Author: Jeff C. Jensen. University of California, Berkeley, department of Electrical Engineering & Computer Science, 2010

Tunneling Ball Device: Disc

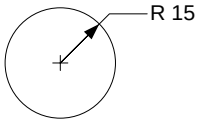

Ball Dimensions

Top

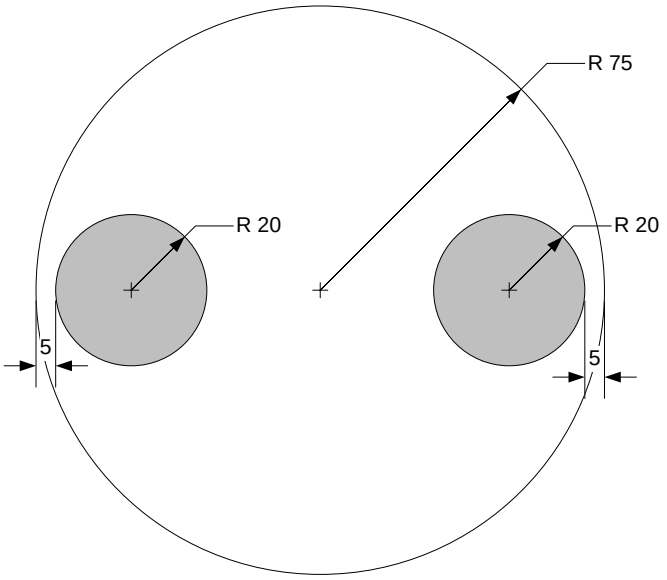

Side

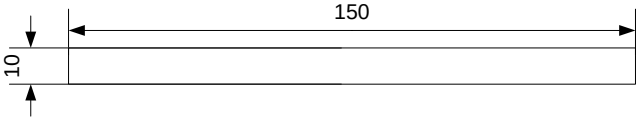

Author: Jeff C. Jensen. University of California, Berkeley, department of Electrical Engineering & Computer Science, 2010